XV90 / P5 TARGET

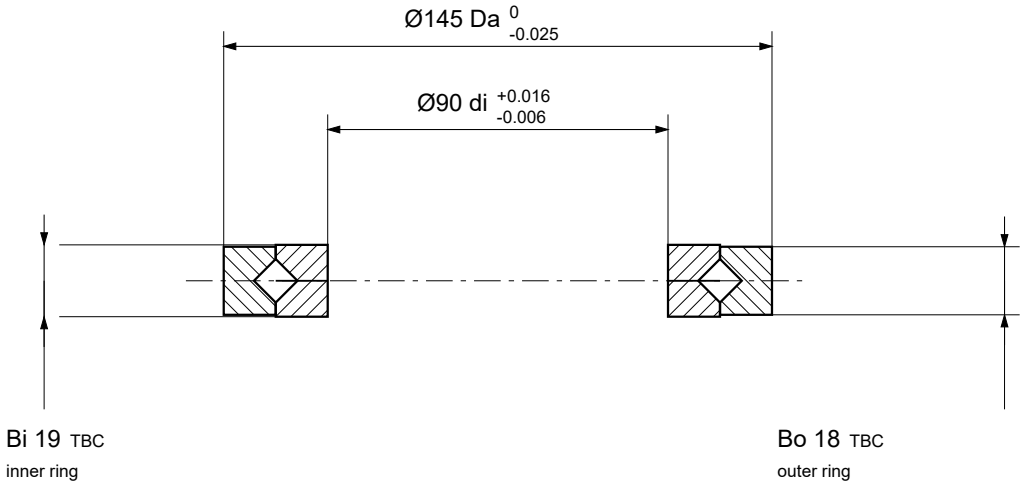

SECTION A-A / INTERNAL DETAILS SCHEMATIC

Scale 0.5:1; mounting holes omitted in section

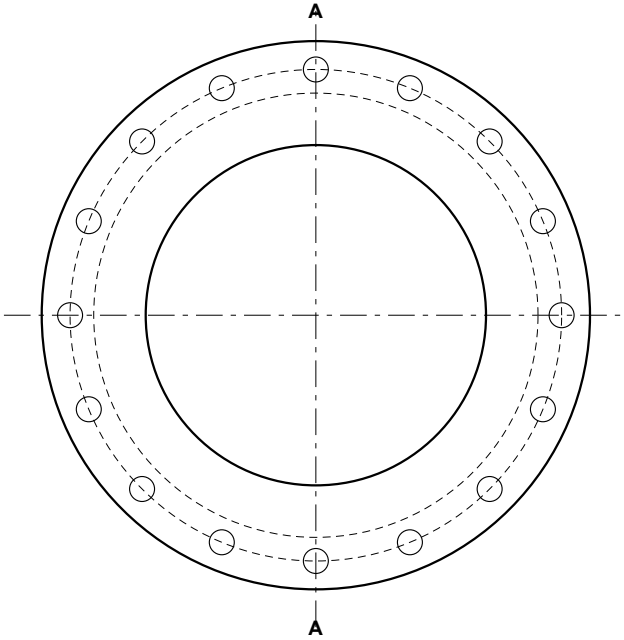

FRONT VIEW / Scale 0.5:1

Ring joint / raceway details are schematic.

BOUNDARY LIMITS / mm

Item	Lower / upper limit
Bore di	89.994 / 90.016
Outside Da	144.975 / 145.000
Inner width Bi	TBC
Outer width Bo	TBC

ROTATIONAL LIMITS / µm MAX.

Ring	Radial	Face
Inner	Not specified	Not specified
Outer	Not specified	Not specified

Outer ring: 16-Ø6.6 THRU, Ø11 CBORE depth 6.4; PCD Ø130.
Mounting reference / mm: ds 11.

Series-specific di J6 / Da h6 are shown. P5 rotational and ring-height limits remain to confirm.
di/Da are locating diameters; Bi/Bo denote individual ring heights.
Hole phase is schematic; position and thread tolerances are not defined here.

Open: XV locating steps and mounting dimensions need official drawing confirmation.

For higher precision grades or custom bearings, please contact:

sales@luoyangdeeplink.com

Luoyang Deeplink Technology Co.,Ltd.

XV90 / P5 TARGET LYDL-0358-P5-C

REV C | 2026-10-16 | UNIT mm | SCALE AS SHOWN 1 / 1

View product specifications Contact LYDL