KG090AR0 / P5 TARGET

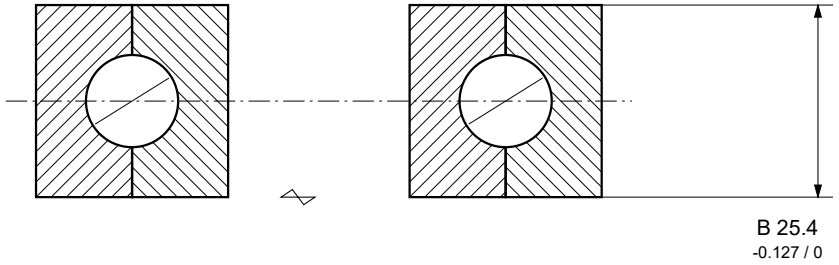

LOCAL SECTION A-A / AXIS GAP SHORTENED

Local scale 1:1; rolling elements and interfaces schematic.

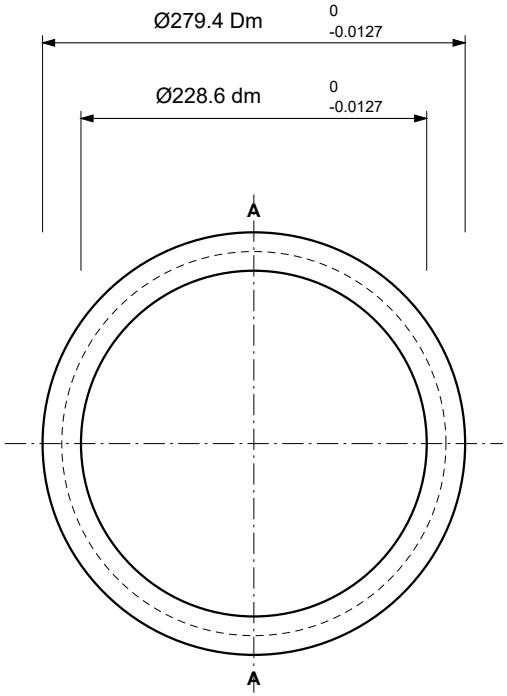

FRONT VIEW / Scale 0.2:1

Raceway and contact geometry schematic.

PROPOSED LIMITS / mm

Item / nominal	Lower / upper limit
Bore 228.6	228.5873 / 228.6
Outside 279.4	279.3873 / 279.4
Width B 25.4	25.273 / 25.4

ROTATIONAL LIMITS / µm MAX.

Characteristic	Limit
Inner radial	10.16
Inner face	12.7
Outer radial	12.7
Outer face	15.24

Thin-section Class4 / ABEC5F candidate, not ISO P5 equivalence. Order limits require agreement.
P5/P4 is the LYDL supply target. TBC items require model-specific limits; internal geometry is not a manufacturing definition.

Open: LYDL P5 acceptance limits: agree applicable thin-section precision system.

For higher precision grades or custom bearings, please contact:

sales@luoyangdeeplink.com

Luoyang Deeplink Technology Co.,Ltd.

KG090AR0 / P5 TARGET LYDL-1225-P5-C

REV C | 2026-10-16 | UNIT mm | SCALE AS STATED 1 / 1

View series specifications Contact LYDL