KF042AR0 / P5 TARGET

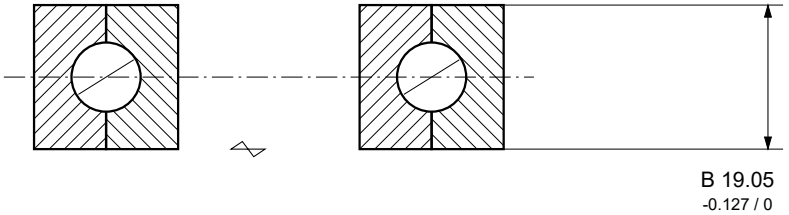

LOCAL SECTION A-A / AXIS GAP SHORTENED

Local scale 1:1; rolling elements and interfaces schematic.

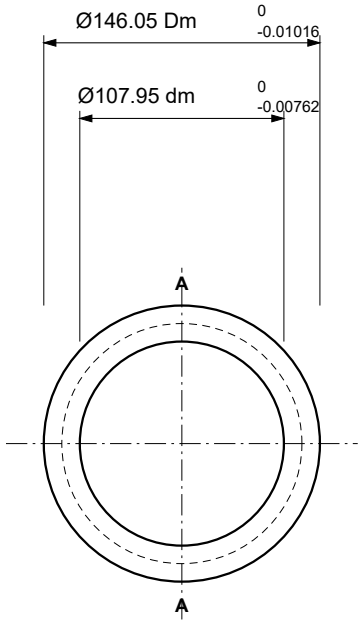

FRONT VIEW / Scale 0.25:1

Raceway and contact geometry schematic.

PROPOSED LIMITS / mm

Item / nominal	Lower / upper limit
Bore 107.95	107.94238 / 107.95
Outside 146.05	146.03984 / 146.05
Width B 19.05	18.923 / 19.05

ROTATIONAL LIMITS / µm MAX.

Characteristic	Limit
Inner radial	7.62
Inner face	10.16
Outer radial	10.16
Outer face	12.7

Thin-section Class4 / ABEC5F candidate, not ISO P5 equivalence. Order limits require agreement.
P5/P4 is the LYDL supply target. TBC items require model-specific limits; internal geometry is not a manufacturing definition.

Open: LYDL P5 acceptance limits: agree applicable thin-section precision system.

For higher precision grades or custom bearings, please contact:

sales@luoyangdeeplink.com

Luoyang Deeplink Technology Co.,Ltd.

KF042AR0 / P5 TARGET LYDL-1126-P5-C

REV C | 2026-10-16 | UNIT mm | SCALE AS STATED 1 / 1

View series specifications Contact LYDL