KB160AR0 / P5 TARGET

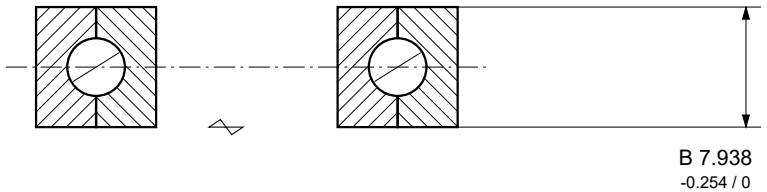

LOCAL SECTION A-A / AXIS GAP SHORTENED

Local scale 2:1; rolling elements and interfaces schematic.

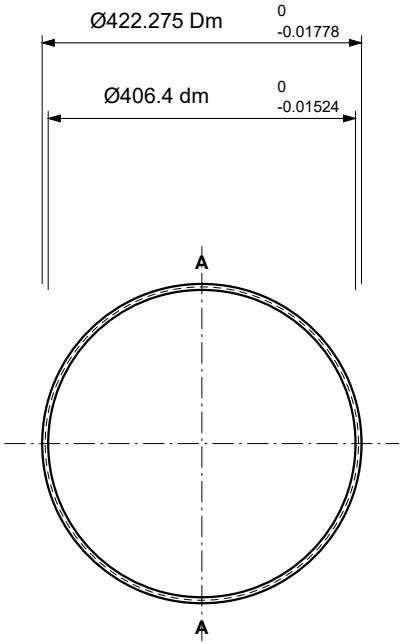

FRONT VIEW / Scale 0.1:1

Raceway and contact geometry schematic.

PROPOSED LIMITS / mm

Item / nominal	Lower / upper limit
Bore 406.4	406.38476 / 406.4
Outside 422.275	422.25722 / 422.275
Width B 7.938	7.684 / 7.938

ROTATIONAL LIMITS / µm MAX.

Characteristic	Limit
Inner radial	17.78
Inner face	20.32
Outer radial	20.32
Outer face	22.86

Thin-section Class4 / ABEC5F candidate, not ISO P5 equivalence. Order limits require agreement.
P5/P4 is the LYDL supply target. TBC items require model-specific limits; internal geometry is not a manufacturing definition.

Open: LYDL P5 acceptance limits: agree applicable thin-section precision system.

For higher precision grades or custom bearings, please contact:

sales@luoyangdeeplink.com

Luoyang Deeplink Technology Co.,Ltd.

KB160AR0 / P5 TARGET LYDL-0989-P5-C

REV C | 2026-10-16 | UNIT mm | SCALE AS STATED 1 / 1

View series specifications Contact LYDL