KA120AR0 / P5 TARGET

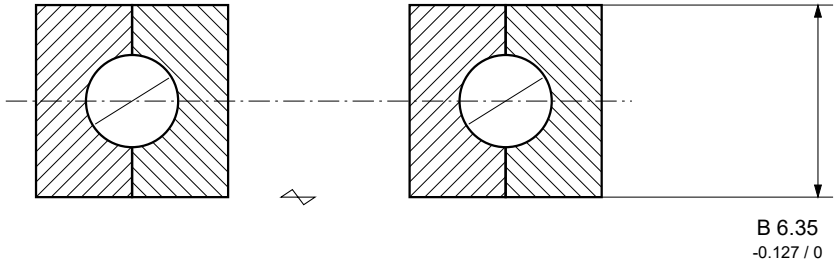

LOCAL SECTION A-A / AXIS GAP SHORTENED

Local scale 4:1; rolling elements and interfaces schematic.

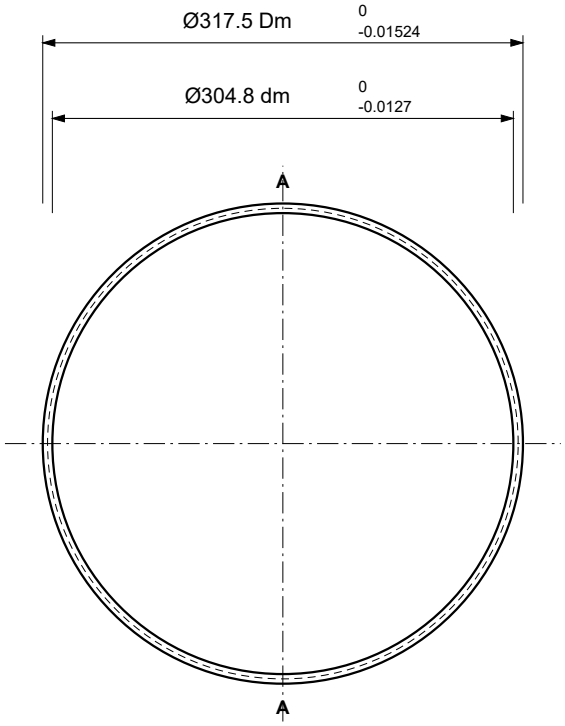

FRONT VIEW / Scale 0.2:1

Raceway and contact geometry schematic.

PROPOSED LIMITS / mm

Item / nominal	Lower / upper limit
Bore 304.8	304.7873 / 304.8
Outside 317.5	317.48476 / 317.5
Width B 6.35	6.223 / 6.35

ROTATIONAL LIMITS / µm MAX.

Characteristic	Limit
Inner radial	12.7
Inner face	15.24
Outer radial	17.78
Outer face	20.32

Thin-section Class4 / ABEC5F candidate, not ISO P5 equivalence. Order limits require agreement.
P5/P4 is the LYDL supply target. TBC items require model-specific limits; internal geometry is not a manufacturing definition.

Open: LYDL P5 acceptance limits: agree applicable thin-section precision system.

For higher precision grades or custom bearings, please contact:

sales@luoyangdeeplink.com

Luoyang Deeplink Technology Co.,Ltd.

KA120AR0 / P5 TARGET LYDL-0926-P5-C

REV C | 2026-10-16 | UNIT mm | SCALE AS STATED 1 / 1

View series specifications Contact LYDL