# KA065AR0 / P5 TARGET

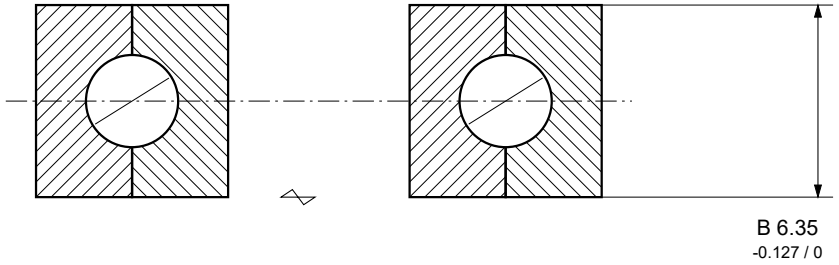


LOCAL SECTION A-A / AXIS GAP SHORTENED

Local scale 4:1; rolling elements and interfaces schematic.

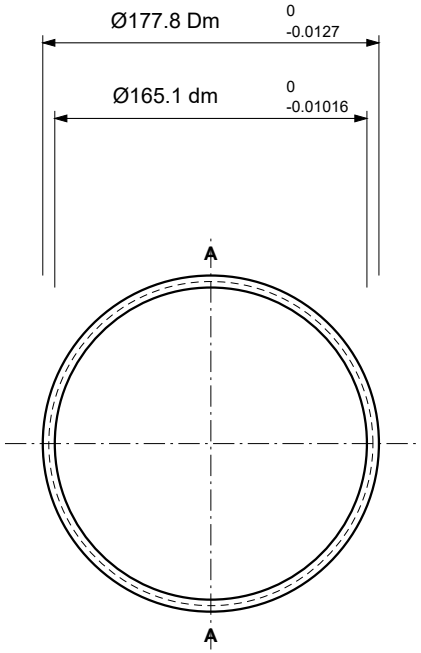


FRONT VIEW / Scale 0.25:1

Raceway and contact geometry schematic.

## PROPOSED LIMITS / mm

| Item / nominal | Lower / upper limit |
|---|---|
| Bore 165.1 | 165.08984 / 165.1 |
| Outside 177.8 | 177.7873 / 177.8 |
| Width B 6.35 | 6.223 / 6.35 |

## ROTATIONAL LIMITS / µm MAX.

| Characteristic | Limit |
|---|---|
| Inner radial | 7.62 |
| Inner face | 10.16 |
| Outer radial | 12.7 |
| Outer face | 15.24 |

Thin-section Class4 / ABEC5F candidate, not ISO P5 equivalence. Order limits require agreement.
P5/P4 is the LYDL supply target. TBC items require model-specific limits; internal geometry is not a manufacturing definition.

Open: LYDL P5 acceptance limits: agree applicable thin-section precision system.

For higher precision grades or custom bearings, please contact:

**sales@luoyangdeeplink.com**

**Luoyang Deeplink Technology Co.,Ltd.**

**KA065AR0 / P5 TARGET** LYDL-0905-P5-C

REV C | 2026-10-16 | UNIT mm | SCALE AS STATED 1 / 1

View series specifications Contact LYDL